©2005 IRWIN Industrial Tools, Knives & Blades [KB] – Trapezoid

IRWIN®

**New Product – Key Facts**

**Product:**

# PRO-TOUCH™ RETRACTABLE BLADE KNIFE

- Lightweight, hard- wearing aluminium body
- No tool spare blade access
- Includes 6 x IRWIN bi-metal BLUE BLADES
- Unbreakable*
- Stay sharp up to 3x longer than carbon steel blades

BI-METAL BLUEBLADE

**Application:**

Ideal for general maintenance jobs

**CONVENIENCE**
Patented quick blade release for easy renewal of sharp blade edge

**CONVENIENCE**
QUICK ACCESS TO SPARE BLADES – Spring loaded push button opener

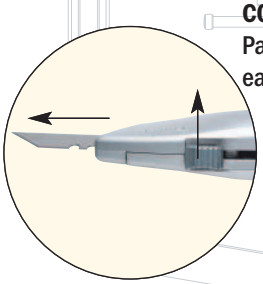

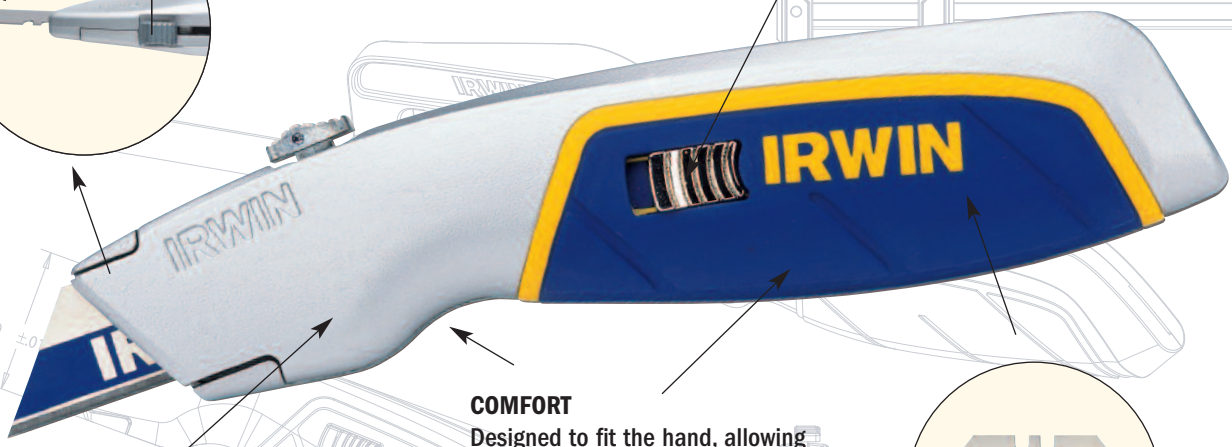


**COMFORT**
Designed to fit the hand, allowing maximum grip and minimum wrist distortion
Soft finger grip panel allows extra grip without squeezing / tension

**DURABILITY**
Made from lightweight but hard-wearing aluminium, with thicker walls in areas of greatest wear – e.g. nose underside, heel, etc.

Contains 6x IRWIN Blue bi-metal BLUE BLADES
- Unbreakable*
- Stay sharp up to 3x longer than standard blades

**CONVENIENCE**
- Blade slider held permanently in place
- Magnet holds working blade in place
- Spare blades held secure – no edge damage / no rattle
- Hinged opening mechanism

**DURABILITY**
Durable blade slider – vertical plunge mechanism vs leaf spring

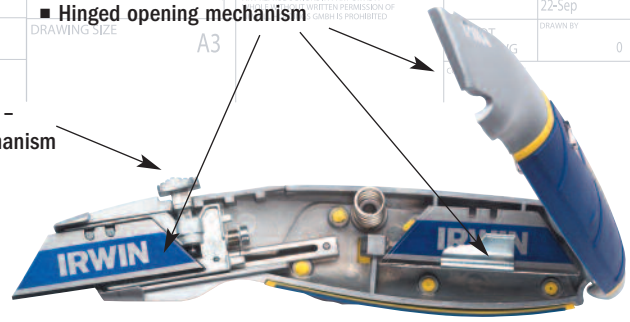


*under normal working conditions

**Pro Touch Retractable Blade Knife**

| Part # | Description | EAN | Pack Type | Pack Qty | Master Qty |
|---|---|---|---|---|---|
| 10504236 | IRWIN – Pro-Touch™ Retractable Knife | 5706915042368 | Hangcard | 5 | 25 |